HYUNDAI GREEN ENERGY

# HEAVY DUTY HYUNDAI

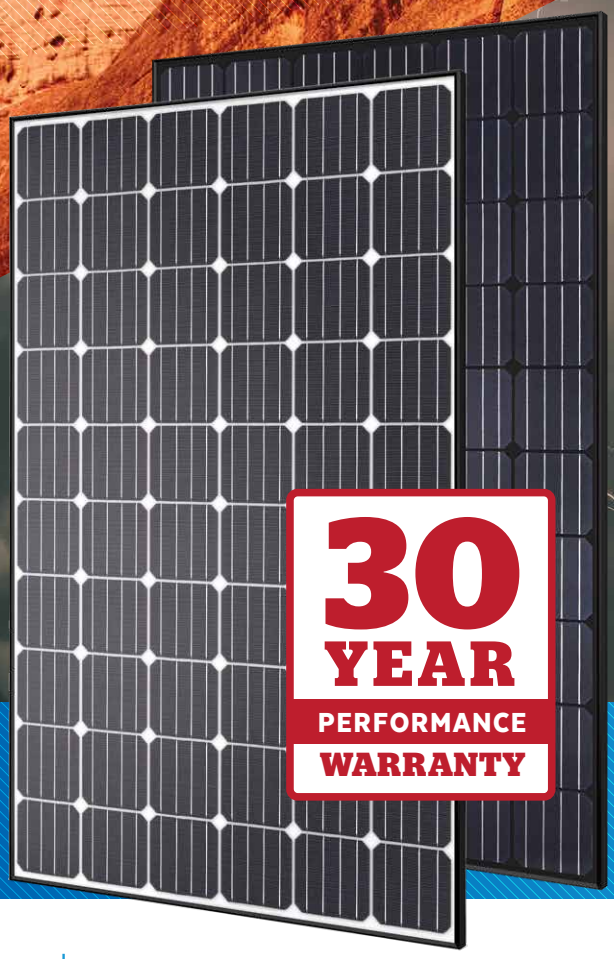

30 YEAR PERFORMANCE WARRANTY

RG SERIES

**Mono Crystalline Module**

300W **60 CELLS**

Hyundai is one of the biggest consumer brand names in the world. Hyundai's unique 'Material Lifetime Control System' delivers superior production processes. This is why we call our solar panel range "Heavy Duty".

SCAN TO WATCH VIDEO

Download QR code reader App or use camera on iOS

Established in 1972, Hyundai Green Energy (member of Hyundai Heavy Industry group) is one of the most trusted names in the heavy industries sector with 31,000 employees and more than 33 Billion USD in annual sales (2017) ranking again in the Global largest 500 businesses. It is one of the largest and the longest standing PV cell and module manufacturer in South Korea with 800 MW of module production capacity. We pride ourselves in providing high-quality solar PV products to more than 3,000 customers worldwide.

## PERL TECHNOLOGY

PERL technology provides ultra-high efficiency with better performance in low irradiation. Maximises installation capacity in limited space.

## ANTI-LID / PID

Both LID (Light Induced Degradation) and PID (Potential Induced Degradation) are strictly eliminated to ensure higher actual yield during lifetime.

## MECHANICAL STRENGTH

Tempered glass and reinforced frame design withstand rigorous weather conditions such as heavy snow and strong wind.

## SECURE INVESTMENT

A global brand with powerful financial strength means peace of mind for the system owner.

## CORROSION RESISTANT

Various tests under harsh environmental conditions such as ammonia and salt-mist passed.

## UL / VDE TEST LABS

Hyundai's R&D centre is an accredited test laboratory of both UL and VDE.

# HYUNDAI GREEN ENERGY — RG SERIES

## Mono Crystalline Module
## 300W 60 CELLS

## ELECTRICAL CHARACTERISTICS*

*All data at STC (Standard Test Conditions).
Above data may be changed without prior notice.

| MODEL | | | HiS-S300RG |
|---|---|---|---|
| Power Tolerance -0% / +3% | Nominal Output (Pmpp) | W | 300 |
| | Open Circuit Voltage (Voc) | V | 39.1 |
| | Short Circuit Current (Isc) | A | 9.9 |
| | Voltage at Pmax (Vmpp) | V | 32.3 |
| | Current at Pmax (Impp) | A | 9.3 |
| | Module Efficiency | % | 18.3 |
| | Cell Type | - | 6", mono-crystalline silicon |
| | Maximum System Voltage | V | 1,000 |
| | Temperature Coefficient of Pmax | °C | -0.40 |
| | Temperature Coefficient of Voc | %/K | -0.29 |
| | Temperature Coefficient of Isc | %/K | 0.039 |

## TEMPERATURE CHARACTERISTICS

| | |
|---|---|
| Nominal Operating Cell Temperature | 46°C ± 2 |
| Operating Temperature | -40 – 85°C |
| Maximum System Voltage | DC 1,000 V (IEC)<br>DC 1,000 V (UL) |
| Maximum Reverse Current | 20A |

## MECHANICAL CHARACTERISTICS

| | |
|---|---|
| Dimensions | 998mm (W) × 1,640mm (L) × 35mm (H) |
| Weight Approx. | 18.7kg |
| Solar Cells | 60 cells in series (6 ×10 matrix), (Hyundai PERL cell, made in South Korea) |
| Output Cables | 4 mm² (12AWG) cables with polarised weatherproof connectors IEC certified (UL listed), Length 1.0m |
| Junction Box | IP68, weatherproof, IEC certified (UL listed) |
| Bypass Diodes | 3 bypass diodes to prevent power decrease by partial shade |
| Construction Front | Anti-reflection coated glass, 3.2mm |
| Encapsulant | EVA \| Back Sheet: Weatherproof film |
| Frame | Clear anodized aluminum alloy type 6063 / Black |

## I-V CURVES

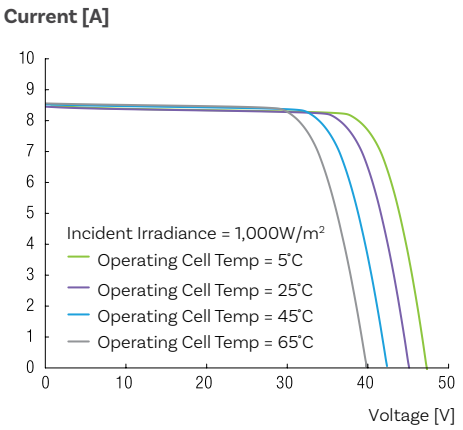


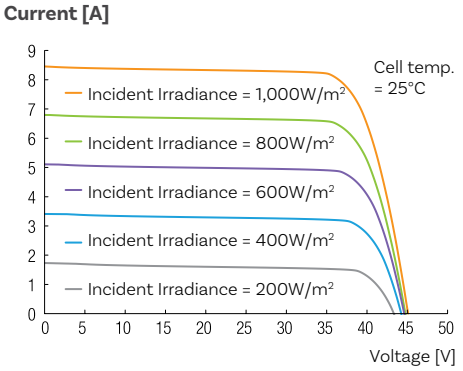


## MODULE DIAGRAM (unit:mm)

**Mono-Crystalline RG Type-Front Side View**

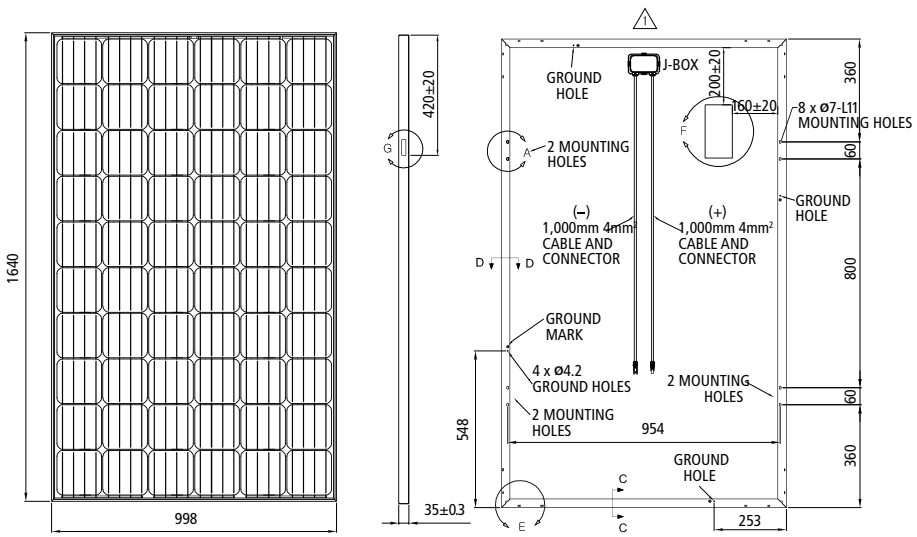


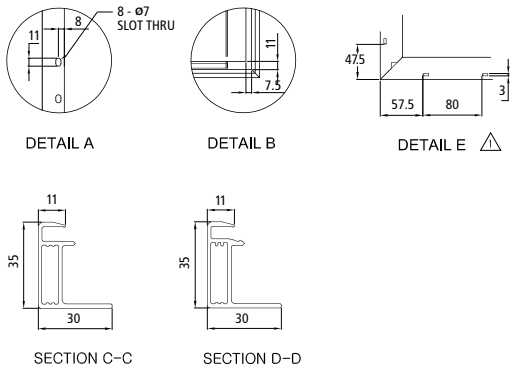


- IEC 61215 (Ed.2) and IEC 61730 by VDE
- UL Listed (UL 1703), Type 1 for Class A Fire Rating
- Advanced Mechanical Test (5,400 Pa) Passed (IEC) / Mechanical Load Test (40 lbs/ft2) Passed (UL)

## CONTACT


Australian Importer and Manufacturer
**Hyundai Green Energy**
Chatswood (Sydney)
**www.hhigreen.com**

**Hyundai Sales and Warranty Supply Partners Pty Ltd**
Support@supplypartners.com.au (warranty)
sales@supplypartners.com.au (sales)
**www.hyundaisolar.com.au**


**Made in Korea**